Application

Discharging valve for irregular fine- and coarse-grained products, e.g. regrind (except foil chips). Also recommended for regular pellets which require increased purity as reduced dead zones prevents accumulation of product residues. Special inlet geometry designed for gentle product handling. The ZVD is engineered for heavy-duty industrial service with pressure differentials up to 1.5 bar(g) [21 psi(g)] and temperatures up to 100°C [212°F].

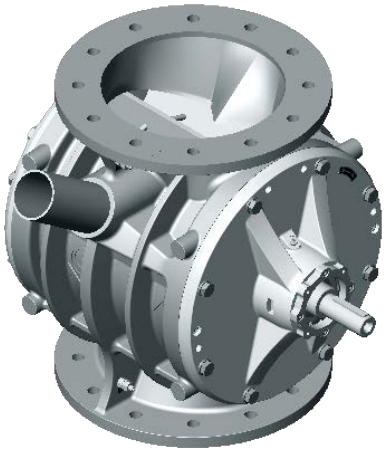

Design

- Explosion pressure shock proof: 10 bar(g) [145 psi(g)], due to heavy duty design
- Inlet for pellets: Anti-chopping inlet geometry (patented) for safe starting below full product column
- Rotor: 10 blades, open-end, flat tips
- Capacity: High filling efficiency by internal leakage gas venting

Technical Data

Standard Mechanical Specifications

- Inlet flange: round, drilled acc. to DIN PN 10 or ANSI 150 lbs
- Materials of construction:
  AC: Hard anodized cast aluminum housing /end plates, stainless steel DIN 1.4541 [AISI 321] rotor
  SS: Cast stainless steel 1.4308 [AISI 304] housing/endplates, stainless steel DIN 1.4541 [AISI 321] rotor
- Shaft sealing: Two NBR lip seals with labyrinth ring, prepared for seal purge
- Vent port
- CE compliant (standard configuration)

Drive

Chain drive with spur gear motor: TEFC inverter duty rated for a 5:1 turndown

US Voltage 230/460 V, 3 Phase, 60 Hz
EU Voltage 230/460 V, 3 Phase, 50 Hz

Options

Shaft Seals

- Alternative materials for shaft sealings: FKM, PTFE, EPDM (FDA approved)
- Seal purge gas unit (completely mounted): incl. plastic tubing, solenoid valve 24 VDC, 8W DC, filter regulator, gauge

Rotor

- Reduced displacement/volume
- Scraper blades on rotor (for sticky products)
- Relieved tips/chamfered blades

Coating

- PTFE
- Wear protection DuroProtect®: Tungsten carbide, chrome (SS/GG executions only)

Polish

- Rotor polished 3.2 Ra [60 grit] to [80 grit] (SS execution only)
- For further polishes: Consult factory

Operating Temperature

- Special configurations for temperatures up to 220°C [428°F]; AC up to 150°C [302°F] only
- AC explosion pressure shock resistant version up to 120°C [248°F] only
- For further temperatures consult factory

Drive

- Direct drive with parallel shaft gear motor, TEFC inverter duty rated for a 5:1 turndown (up to 100°C [212°F] only)

Hazardous Location Options

- NEC or ATEX executions available
- Execution for application in Ex-Zones (ATEX) and as protection system (flameproof for dust ST2) available

Accessories

- Extraction device FXS-1 incl. quick disassembling coupling (on drive side)
- Floor support stands
- Discharge adapter / Feeding shoe
- Rotation sensor / Speed monitor
- Plug for vent port

Dimensions mm [in]

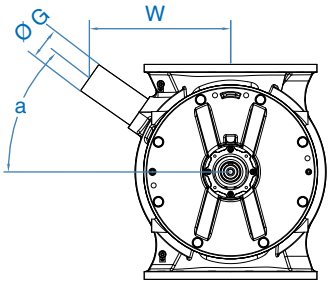

Shown without drive

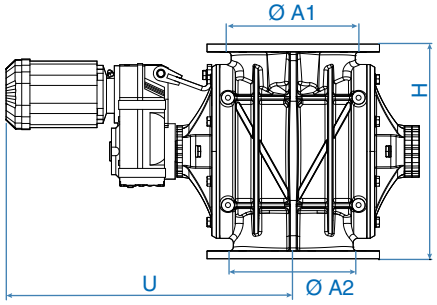

Drive with parallel shaft gear motor

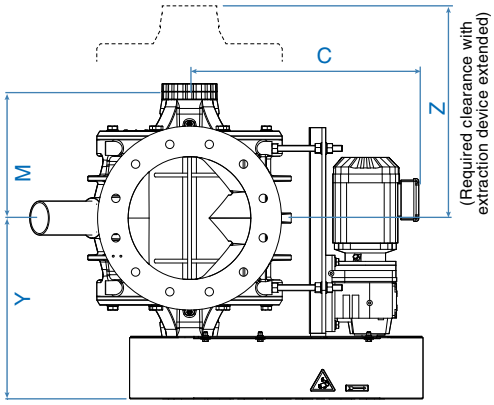

With chain drive

Model	Inlet*/Outlet*				Other Dimensions									Approx. Weight*** kg [lb]	
	A1/A2 (DIN)	A1/A2 (ANSI)	Ø A1	Ø A2	H	C**	Y**	W	M**	Z**	U**	Ø G	a	AC	SS
200	ND 150	6"	166 [6.54]	155 [6.10]	360 [14.17]	490 [19.29]	328 [12.91]	226 [8.90]	234 [9.21]	761 [29.96]	477 [18.78]	48.3 [1.90]	30°	24 [53]	74 [163]
250	ND 200	8"	213 [8.39]	207 [8.15]	450 [17.72]	515 [20.28]	347 [13.66]	278 [10.94]	253 [9.96]	786 [30.94]	521 [20.51]	60.3 [2.37]	30°	30 [66]	121 [266]
320	ND 250	10"	272 [10.71]	259 [10.20]	500 [19.69]	635 [25]	391 [15.39]	320 [12.60]	305 [12.01]	958 [37.72]	591 [23.27]	76.1 [3.00]	30°	42 [92]	190 [418]
400	ND 300	12"	322 [12.68]	310 [12.20]	600 [23.62]	700 [27.56]	474 [18.66]	393 [15.47]	352 [13.86]	1238 [48.74]	720 [28.35]	88.9 [3.5]	30°	92 [202]	353 [777]
480	ND 350	14"	360 [14.17]	350 [13.78]	750 [29.53]	755 [29.72]	540 [21.26]	464 [18.27]	415 [16.34]	1271 [50.04]	770 [30.31]	88.9 [3.5]	45°	270[594]	650 [1433]
550	ND 400	16"	410 [16.14]	400 [15.75]	850 [33.46]	785 [30.91]	590 [23.23]	537 [21.14]	470 [18.50]	--	950 [37.40]	108.0 [4.25]	45°	370 [814]	860 [1895]
630	ND 500	20"	500 [19.69]	480 [18.90]	970 [38.19]	840 [33.07]	608 [23.94]	589 [23.19]	508 [20]	--	1010 [39.76]	108.0 [4.25]	45°	700 [1540]	1360 [2998]
800	ND 700	28"	700 [27.56]	680 [26.77]	1140 [44.88]	1380 [54.33]	800 [31.50]	756 [29.76]	561 [22.09]	--	1260 [49.61]	168.3 [6.63]	45°	1420 [3124]	2570 [5665]

* Drilled according to DIN PN 10 or ANSI 150 lb
** Dimensions are not valid for high temperature executions and may vary depending on installed drive
*** Without drive

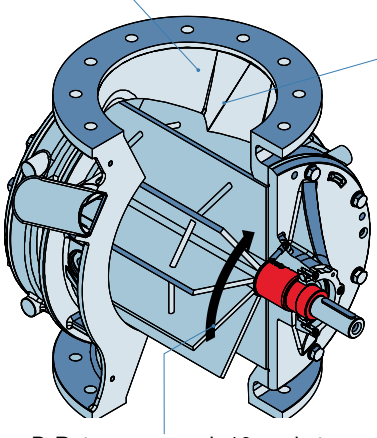

D-Rotor, open end, 10 pockets

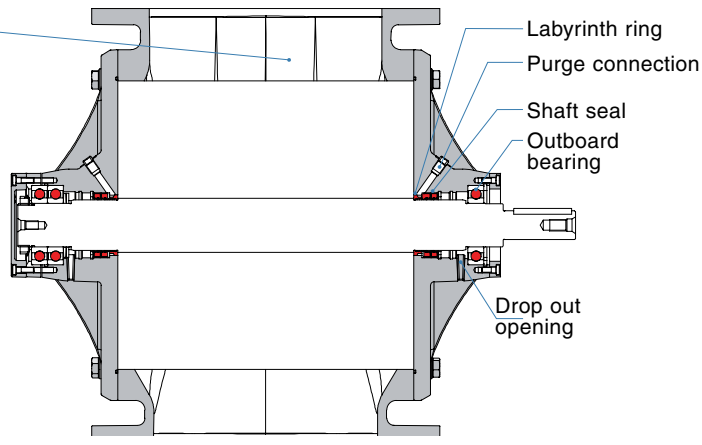

Large outlet

Caution: Measurements are for general reference only. Please consult dimensional drawing for exact measurements.

Copyright by K-Tron Technologies, Inc. Covered by patents in USA and foreign countries. Specifications subject to change without notice.