DynaShield®

Surge Protection Device

PT-RD AC Series

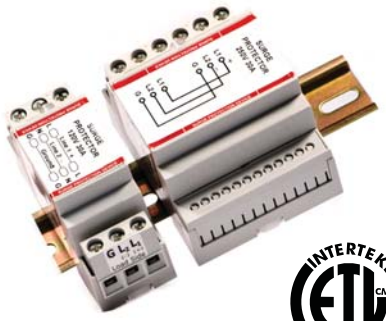

Product Description

The RD Series is designed to protect single phase low voltage AC power supply system against transient surges at LPZ1 and higher. The SPDs are ANSI/UL 1449 4th Edition Type 4 recognized components for use in Type 2 applications. Ideal for use in SCADA Systems, PLCs and most other sensitive electronic equipment.

FEATURES:

- UL 1449 4th Edition Type 4 for use in Type 2 applications
- SCCR 100 kAIC
- Series or parallel Installation
- LED status
- Screw or DIN mount

Specifications

Model	PT-RD-20-120V-30	PT-RD-20-250V-30	PT-RD-40-120V-30	PT-RD-40-250V-30
Tested To	UL 1449 4th Edition			
SPD Category	Type 4 for use in Type 2 applications			
Number Of Ports	Two Port Device			
Technology	Metal Oxide Varistor (MOV)			
Nominal Operating Voltage Un	120 Vac	240 Vac	120 Vac	240 Vac
Maximum Current	30 A			
Maximum Continuous Operating Voltage U_C	140 V	260 V	140 V	260 V
Nominal Discharge Current I_N (8 x 20 µs)	3 kA	3 kA	3 kA	3 kA
Maximum Discharge Current I_{max} (8 x 20 µs)	20 kA	20 kA	40 kA	40 kA
Voltage Protection Rating Vpr @ I_N (L-N)	600 V	800 V	500 V	800 V
(L-PE)	600 V	800 V	500 V	800 V
(N-PE)	600 V	800 V	600 V	800 V
Response Time	≤ 25 ns			
Visual Status Indication	LED: Green = Normal, Dark = Replace			
Location Category	Indoor Only			
Method of Mounting	Wall mount or Fixed 35 mm DIN rail			
Dimension (H x W x D)	100 mm x 35.6 mm x 57.9 mm (3.94” x 1.4” x 2.3”)		100 mm x 71.1 mm x 57.9 mm (3.94” x 2.8” x 2.3”)	
Weight (Max)	0.25 kg (0.5 lb)		0.45 kg (0.9 lb)	
Maximum Wire Size	Multi strand 13 mm² (#6 AWG)			
Operating Temperature	-40°C to +80°C			
Relative Humidity	≤ 95% non condensing			
Altitude	≤ 3000 m			
Enclosure Protection Level	IP 20			
Housing Inflammability Rating	Thermoplastic, UL 94 V-0			

Dimensions

20 kA

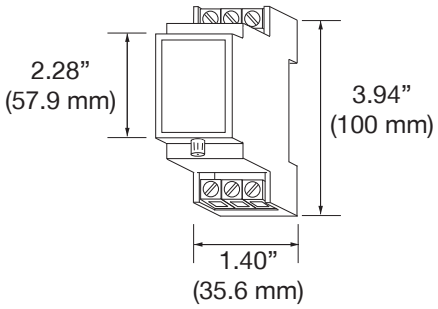
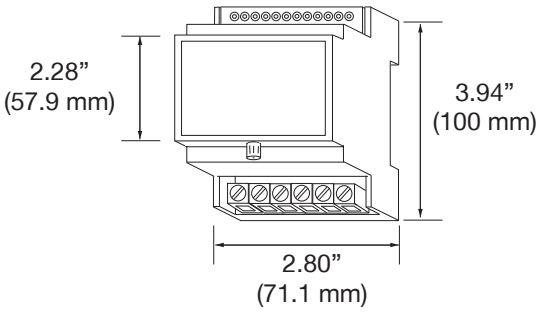
40 kA